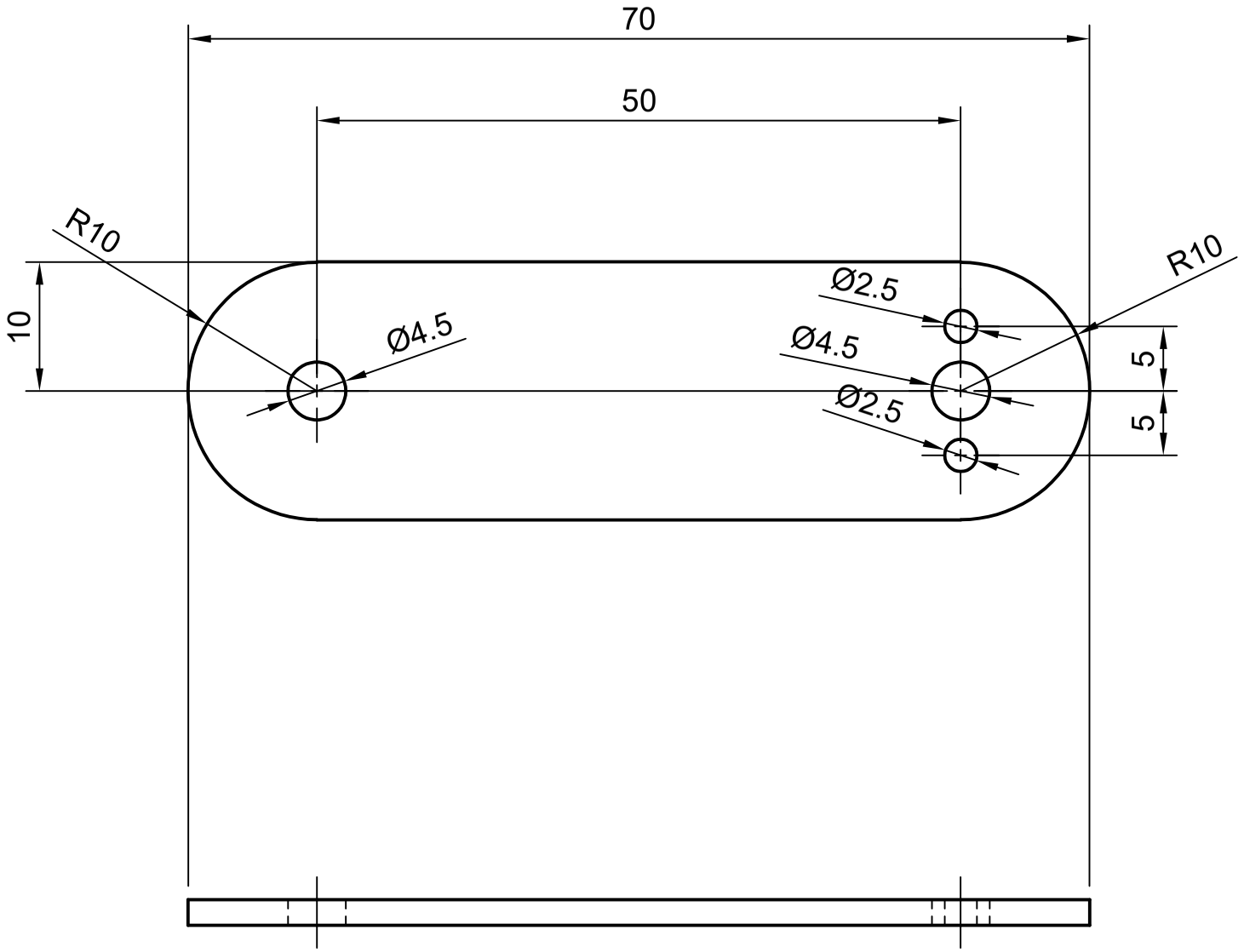

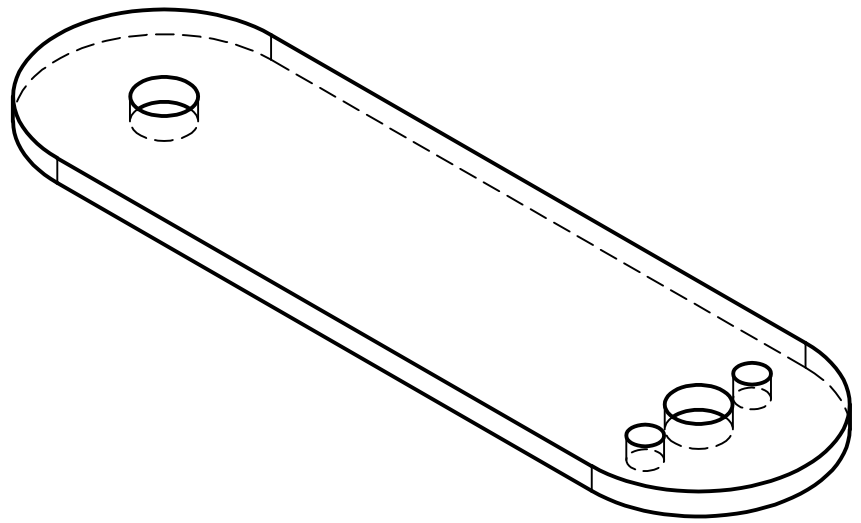

Dept.	Technical reference	Created by Syun Ochiai 2021/10/18	Approved by
		Document type	Document status
		Title SubLink1	DWG No.
			Rev. / Date of issue / Sheet 1/1